A2FE Series Internal Installation

Fixed Displacment Motor

Product show and brief introduction

说明：

- 主要用于安装在机械齿轮箱中，例如：履带驱动齿轮箱。

特点：

- 马达的安装法兰设计在壳体的中间，这种结构允许马达几乎完全装进机械齿轮箱，从而提供一个十分紧凑的部件。
- 易于组装，仅需“插入”机械齿轮箱。
- 不需要考虑安装公差。

Description:

Hydrostatic play-in motors are intended primarily for installation in mechanical gearboxes, e.g.track drive gear boxes.

Special Features:

The design of the motor with the mounting flange in center of the housing allows if to be almost fully integrated into a mechanical gear box to give an extremely compact unit.
No installation tolerances to consider.
Easy assembly, simply plug-in to mechanical gearboxes.

剖视图：

Section

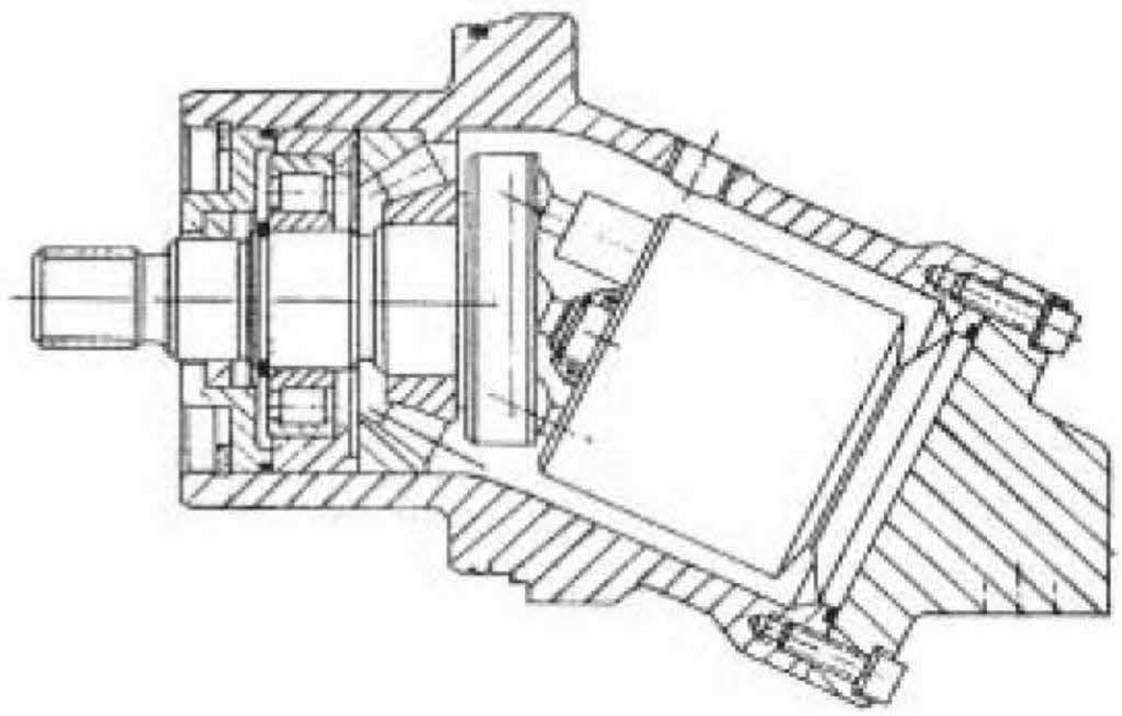

Model Code

A2F	E	80	W	70	A	11

马达型号 Motor Type

定量马达 A2F

Fixed Displacement Motor

安装型式 Mounting Type

内藏式 E

Internal Installation

规格 Size

排量 ml/r	54.8	55
displacement	80	80
	107	107
	126.3	125
	160	160

后盖 Port Plate

11

轴伸 shaft End

花键	DIN5480	Z
	Splined shaft	A

	55	80	107	125	160
Z	●	○	●	○	●
A	●	●	●	●	●

○:没有
●:有

结构型式 Series

125	71
55, 80, 107, 160	70

旋转方向 Direction of Rotation

双向 alternating W

订货示例：A2FE80W70A11，A2FE 内藏式定量马达规格 80，双向旋转，70 结构 A 型花键 11 号后盖

Ordering Example：A2FE80W70A11 Fixed displacement motor A2FE.Size 80.altrnating rotation W.Series 70 Splined shaftA.port plate 11.

技术数据 Technical Date

A 或 B 口的压力 Pressure at port A or B

额定压力 Nominal pressure _____ P_n = 35MPa

最高压力 Peak pressure _____ p_{max} = 40MPa

A 口或 B 口的压力和不得超过 70MPa

(每侧最高压力 40MPa)

The sum of the pressure at port A or B must not exceed 70MPa (Individual pressure on either side max,40MPa)

壳体允许最高压力 Maximum permissible case pressure

P_{ca} _____ 0.2MPa

油温范围 Fluid Temperature Range

t_{min} _____ −25℃

t_{max} _____ +80℃

粘度范围 Viscosity Range

V_{min}(短期 for short periods)

_____ 10mm²/s

V_{max}(短期 for short periods)

_____ 1000mm²/s

最佳工作粘度 Optimum Operating viscosity

V_{opt} _____ 16−36mm²/s

油液选择 Fluid Recommendations

工作温度范围 Operating temperature range	推荐粘度按 DIN 51519 或 ISO(VG) Recommendations viscosity class to DIN 51519 ISO(VG)
30−40℃	VG22 22mm²/s at 40℃
40−50℃	VG35 32mm²/s at 40℃
50−60℃	VG46 46mm²/s at 40℃
60−70℃	VG68 68mm²/s at 40℃
70−80℃	VG100 100mm²/s at 40℃

油液的过滤

推荐过滤精度为10μm，25-40μm的较粗过滤是可以使用，

但用10μm的过滤可延长使用寿命(降低磨损)

Filtration of Fluid

Recommended filtration:10μm. Coarser filtration of 25-40μm,is possible, but with filtration of 10um. longer service life is obtained (reduce wearing).

转速范围

最低转速 n_{min}没限制，如果要求高的旋转均匀性，

则n_{min}不低于50rpm.

最高转速见下表

Speed Range

No limitation on minimum Speed n_{min}.if high uniformity of rotation is required, n_{min} should not be lower than 50 rpm.See table for maximum Speed n_{max}.

安装位置

任选。壳体必须始终充满油液

Mounting Position

Optional.The housing must always be filled with oil.

参数计算 Calculation of size

马达 Motor

流量 Flow $Q = \frac{V_g \cdot n}{1000 \cdot \eta_v}$ (L/min)

扭矩 Torque $M = \frac{1.59 V_g \cdot \triangle P \cdot \eta_{mh}}{10}$ (Nm)

功率 Power $P = \frac{Mn}{9549} = \frac{Q \cdot \triangle P \cdot \eta_t}{60}$ (KW)

转速 Speed $n = \frac{1000 \cdot Q \cdot \eta_v}{V_g}$ (r/min)

V_g:排量 geom.displacement(ml/r)

$\triangle P$:压差 Pressure differential(MPa)

n:转数 Speed

η_v:容积效率 volumetric efficiency

η_{mh}:机械效率 mech.hydr.efficiency

η_t:总效率 Overall efficiency

$[\eta_t = \eta_v \cdot \eta_{mh}]$

技术参数（理论值、未考虑η_v、η_{mh}数值经过圆整）

Technical Data (theoretical Values,without considering η_v. η_{mh}.Values rounded off)

规格 size			55	80	107	125	160
排量 Displacement	V_g	ml/r	54.8	80	107	126.3	160
最高转速 Max.Speed	n_{max}	r/min	3750	3350	3000	3000	2650
最大流量 Max.flow	Q_{max}	L/min	206	268	321	379	424
扭矩常数 Torque constants	Mk	Nm/MPa	8.71	12.74	16.97	20.1	25.40
最大扭矩 Max.Torque △p=35MPa	M	Nm	305	446	594	703.5	889
最大功率 Max.Power △p=35MPa	P	kw	120	156	187	221	247
惯性矩 Moment of inertia about drive shaft	J	Kgm^2	0.0052	0.0109	0.0167	0.0322	0.0532
重量 Weight(approx)		Kg					

元件尺寸：

Unite Dimensions

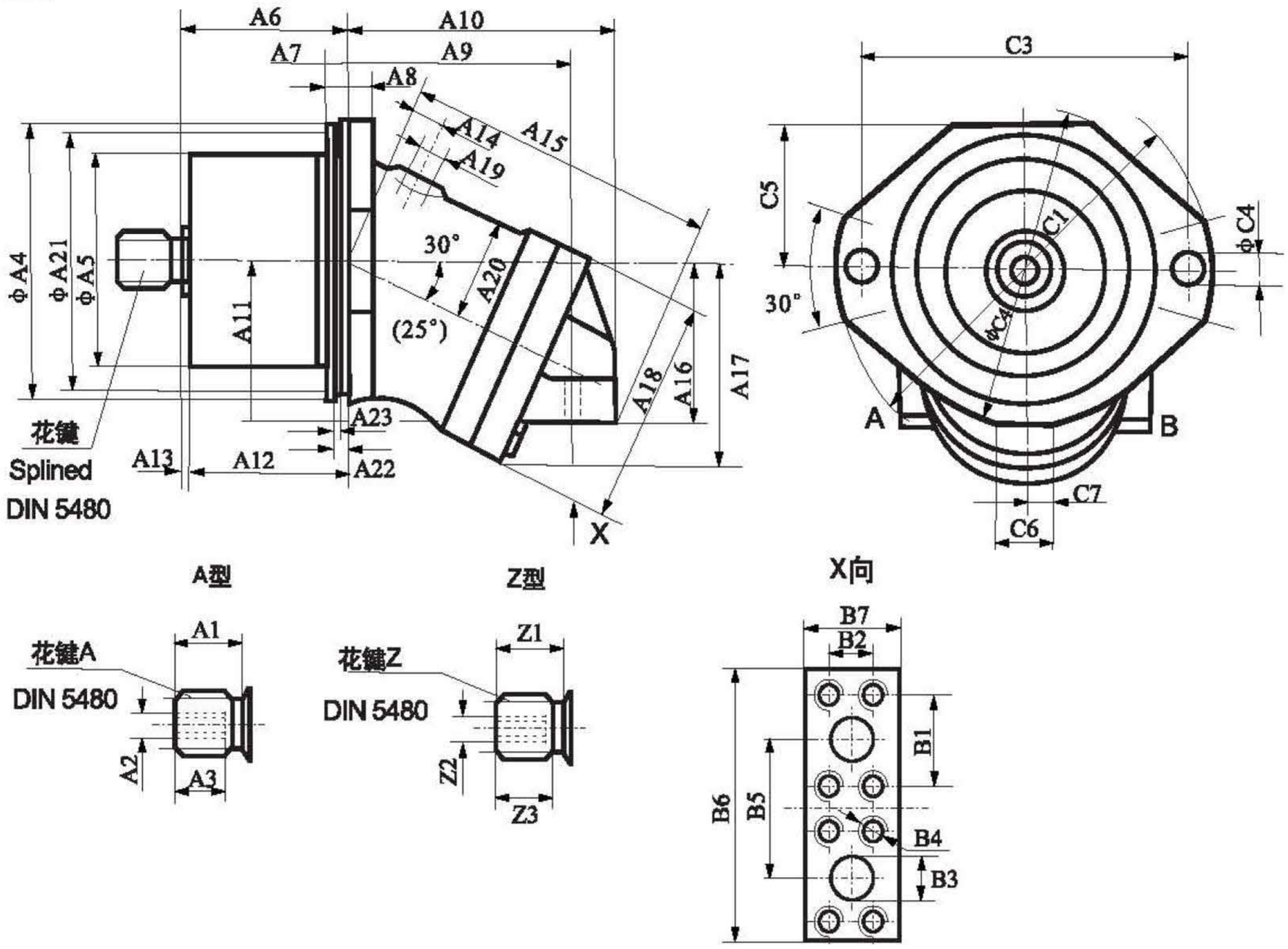

规格	A 型花键				Z 型花键						
size	Splined A DIN 5480	A_1	A_2	A_3	Splined Z DIN 5480	Z_1	Z_2	Z_3	A_4	A_5	A_6	A_7
55	W35 × 2 × 30 × 16 × 9g	40	M12	28	W30 × 2 × 30 × 14 × 9g	35	M12	28	160h6	120	92.3	15
80	W40 × 2 × 30 × 18 × 9g	45	M12	28	W35 × 2 × 30 × 16 × 9g	40	M12	28	190h6	139	110.8	15
107	W45 × 2 × 30 × 21 × 9g	50	M16	36	W40 × 2 × 30 × 18 × 9g	45	M16	28	200h6	155	122.8	15
125	W45 × 2 × 30 × 21 × 9g	50	M16	36	W40 × 2 × 30 × 18 × 9g	45	M16	28	200h6	155	123	15
160	W50 × 2 × 30 × 24 × 9g	55	M16	36	W45 × 2 × 30 × 21 × 9g	50	M16	36	200h6	170	122.8	15

规格												深				
size	A_8	A_9	A_{10}	A_{11}	A_{12}	A_{13}	A_{14}	A_{15}	A_{16}	A_{17}	A_{18}	A_{19}(J)	deep	A_{20}	A_{21}	A_{22}	A_{23}
55	18	151	175	109	90	2.3	34.5	193.5	82	112	132	M18 × 1.5	12	63	151.62	10.5	7.1
80	20	160	187	113	106	4.8	18	218	108	136	160	M18 × 1.5	12	80	183.7	10	5.2
107	20	152	206	114	120	2.8	25	230	116	146	165	M18 × 1.5	12	82	193.7	10	5.2
125	20	143	178	114	120	3	25	210	112	148	165	M18 × 1.5	12	82	193.7	10	5.2
160	20	222	255	134	121.7	3.5	45	292	137	175	195	M18 × 1.5	14	93	191.62	10.5	7.1

规格						深											O 型圈 GB3452.1−83	
size	R	B_1	B_2	B_3	B_4	deep	B_5	B_6	B_7	C_1	C_2	C_3	C_4	C_5	C_6	C_7	O−Ring	
55	10	50.8	23.8	19	M10	17	75	147	48	235	190	200	18	82	40	20	ø150 × 5.3	GB3452.1−83
80	10	57.2	27.8	25	M12	17	84	166	66	260	220	224	22	98	40	0	ø180 × 4	DIN
107	16	66.7	31.8	32	M14	19	99	194	70	286	232	250	22	103	40	0	ø192 × 4	DIN
125	16	66.7	31.8	32	M14	19	99	194	70	286	232	250	22	103	40	0	ø192 × 4	DIN
160	12	66.7	31.8	32	M14	19	99	194	70	286	232	250	22	104	42	0	ø190 × 5.3	GB3452.1−83